TAG ALL PAPER WORK AND PACKAGES
PROJECT: **
CUSTOMER PURCHASE ORDER No.

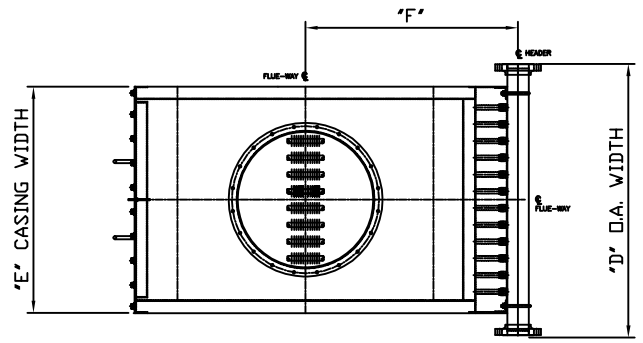

PLAN VIEW

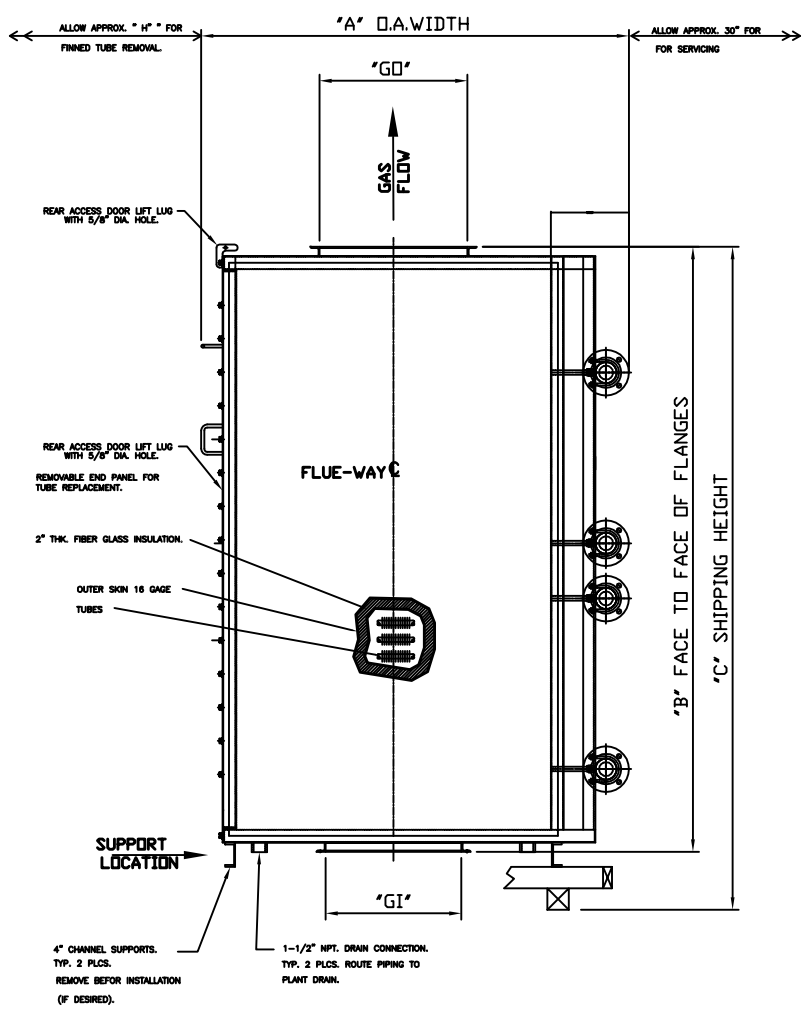

ELEVATION

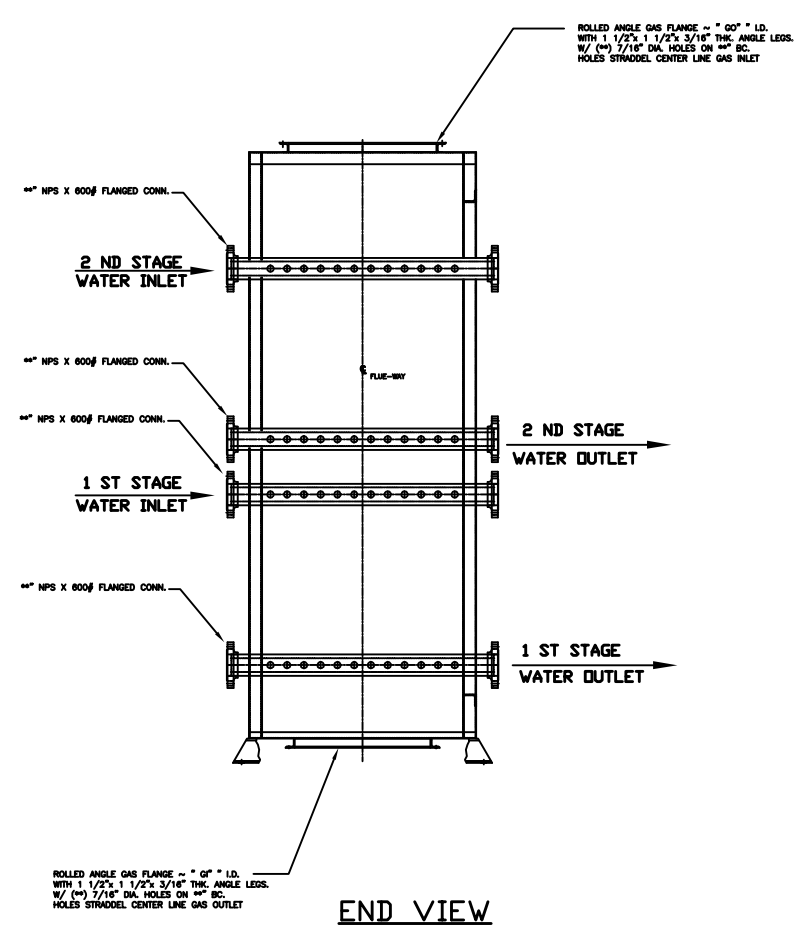

END VIEW

PERFORMANCE DATA
WATER FLOW: ** PPH
WATER TEMP IN: **"F OUT: **"F PRESSURE DROP: **PSI
GAS FLOW: ** PPH
GAS TEMP IN: **"F OUT: **"F PRESSURE DROP: ** IN WC
RECOVERY: ** BTU/HOUR

** FOR PERFORMANCE DATA SEE PROPOSAL

DESIGN DATA
MODEL No.:-------- **
DESIGN: ---------- 600 PSI @ 700 F
A.S.M.E. SECTION VIII, DIVISION 1, "U" STAMP
WEIGHT EMPTY ----APPROX **#
WEIGHT FLOODED --- APPROX ** #

---- NOTES ----

1.) REFER TO OPERATION AND MAINTENANCE MANUAL FOR UNIT INSTRUCTIONS.
2.) UNIT IS EQUIPPED WITH PLENNUMS TO DIVERT WATER THROUGH 1-1/2" DRAIN CONN'S.
3.) UNIT NOT DESIGNED FOR STACK LOADING.
4.) EXTERNAL PIPING NOT TO BE SUPPORTED BY UNIT WATER MANIFOLD PIPE.
5.) SAFTY RELIEF VALVE INCLUDED SET PRESSURE 250 PSI (MAX PUMP PRESSURE 225 PSI) MAX CAPACTY ** PPH
TO BE MOUNTED IN FIELD BY OTHERS SEE O & M MANUAL
6.) PAINT N/A
7.) MATERIALS OF CONSTRUCTION
** TUBES-**
** HEADERS- **
** OUTER CASING- **
8.) UNIT NOT DESIGNED WITH A DAMPER THAT HAS A BLADE THAT MUST TRAVEL INSIDE THE GAS CONNECTION FLANGES. CONSULT FACTORY FOR SPECIAL APPLICATIONS.
9.) JOB INFORMATION
THIS ORDER IS FOR ___**_____UNIT
CUSTOMER PURCHASE ORDER No.
CUSTOMER: **
10.) ISSUED FOR INFORMATION
11.) RELEASE FOR FABRICATION WILL BE CONSIDERD AS CUSTOMERS VERIFY ALL PREFORMANCE PARAMETERS UTILIZED IN THE GENERATION OF THE UNIT SIZING AS ACCURATE.
12.) OPTIONAL EQUIPMENT WITH THIS ORDER **

THIS DRAWING IS COMPRISED OF INFORMATION WHICH IS CONFIDENTIAL AND PROPRIETARY TO BOILERROOM EQUIPMENT INC. AND SHALL NOT BE DISCLOSED OUTSIDE OF THE COMPANIES TO WHOM IT IS SUBMITTED, AND SHALL NOT BE DUPLICATED, USED, OR DISCLOSED, IN WHOLE OR IN PART, FOR ANY PURPOSE OTHER THAN THAT OF LEGITIMATE REFERENCE BY AUTHORIZED INDIVIDUALS IN THE DIRECT CONDUCT OF BUSINESS WITH BOILERROOM EQUIPMENT INC..

HYDRO TEST PRESSURE = ____ PSIG
SHIPPING WEIGHT = _____#

REV	DESCRIPTION	DATE
0	ISSUED FOR INFORMATION	**

REVISION TABLE

BOILERROOM EQUIPMENT INC.
637 DONOHOE RD. SUITE B
LATROBE, PA 15650
Phone 724-837-7001 Fax 724-837-7003

PROJECT: **

TWO STAGE BOILER ECONOMIZER

CUSTOMER: **,

MODEL: **

JOB NO.	DWG NO.	REV
XXXX-XXX	P- ** -1	1B

SCALE NONE | DATE: ** | DRAWN BY: JR